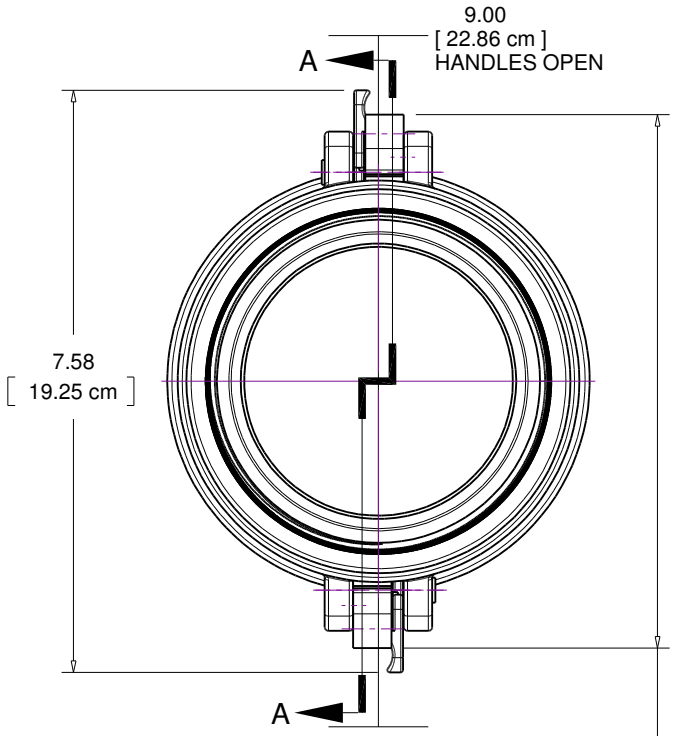

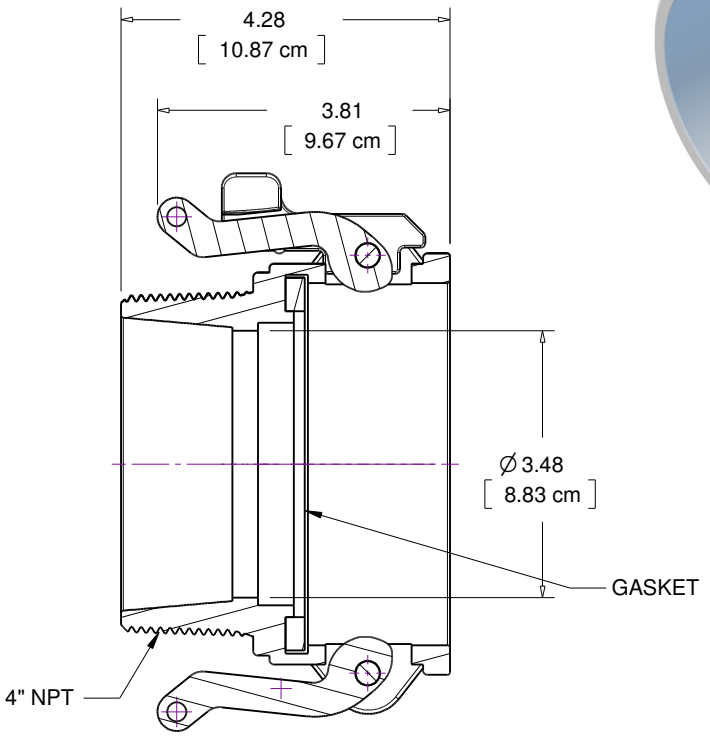

Section A-A

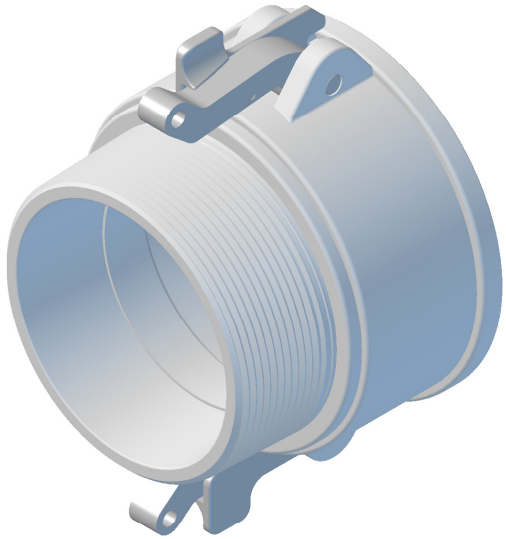

MATERIAL (*) DESIGNATION

(M) = POLYGLASS (N) = NYGLASS

(F) = FOODFLO (V) = PVDF

BEE VALVE, INC

TITLE/DESC

FEMALE COUPLER MALE THREAD

MATERIAL
SEE MATERIAL TABLE (*)

THIS DOCUMENT CONTAINS PROPRIETARY INFORMATION AND MAY NOT BE DISCLOSED TO OTHERS FOR ANY PURPOSE, NOR USED FOR MANUFACTURING PURPOSES WITHOUT THE WRITTEN PERMISSION OF BEE VALVE INC

DATE 04/16/15

PART NO 400B-(*)

REV